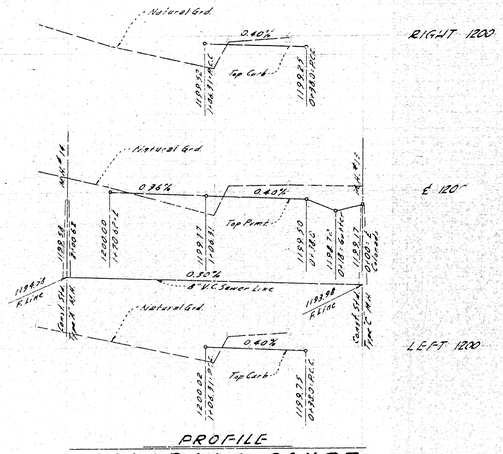

PROFILE
COLORADO COURT
Scale: Horz. 1"=40' Vert. 1"=4'

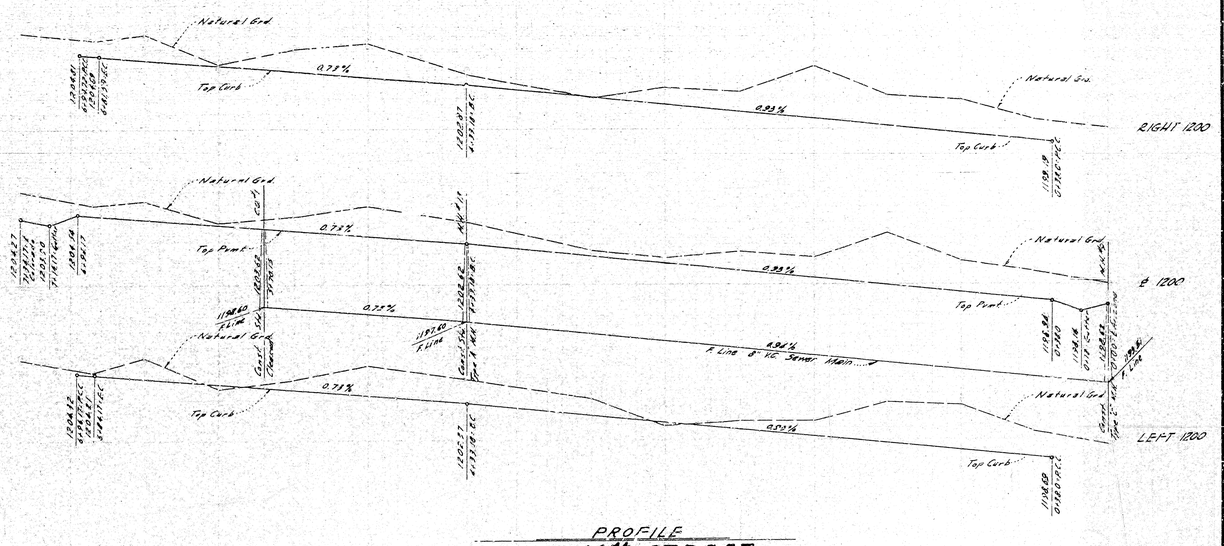

PROFILE
14th STREET
Scale: Horz. 1"=40' Vert. 1"=4'

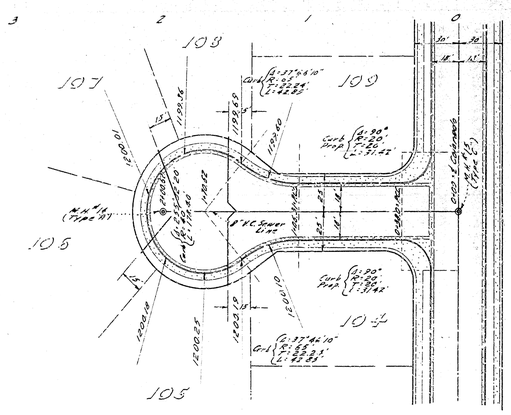

PLAN
COLORADO COURT
Scale 1"=40'

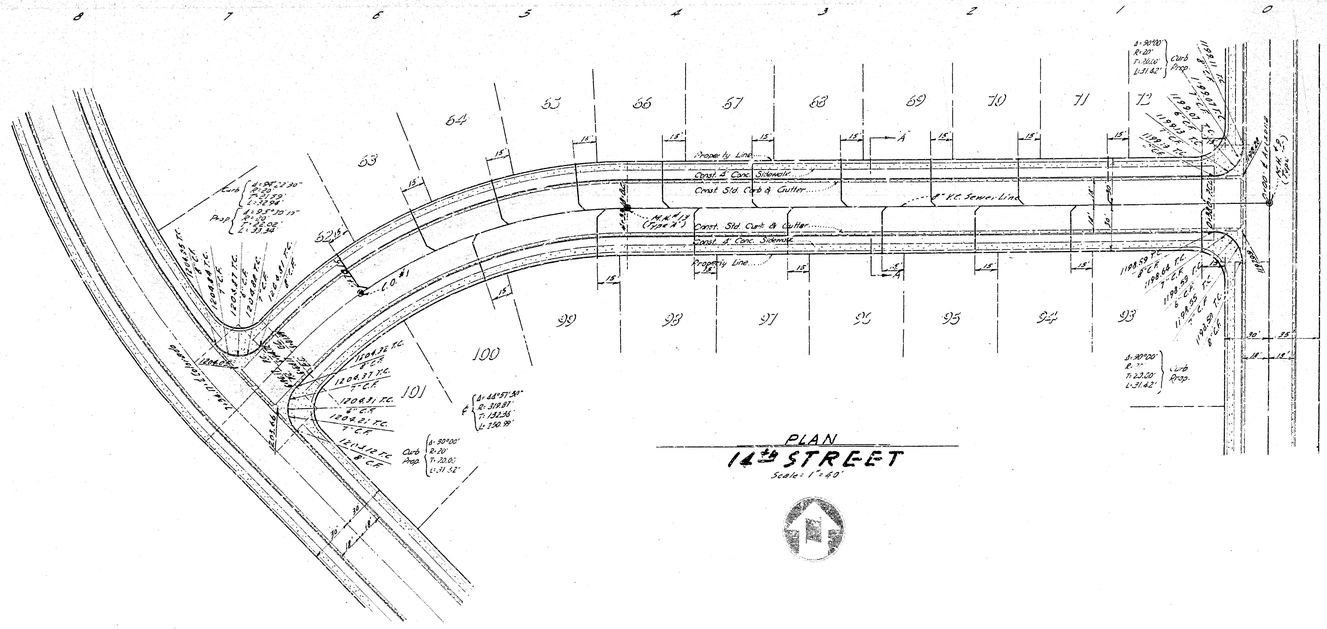

PLAN
14th STREET
Scale: 1"=40'

IMPROVEMENT PLANS
TRACT NO 5629 DWG NO 2540

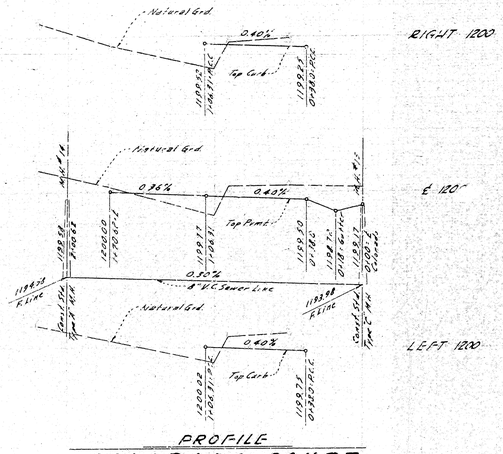

PROFILE
COLORADO COURT
Scale: Horz. 1"=40' Vert. 1"=4'

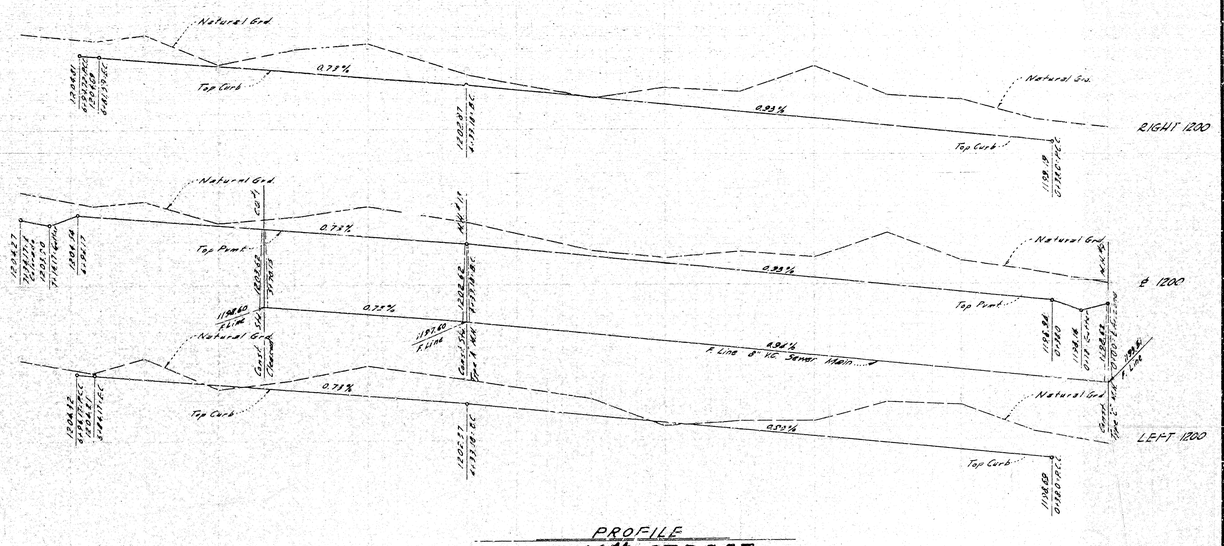

PROFILE
14th STREET
Scale: Horz. 1"=40' Vert. 1"=4'

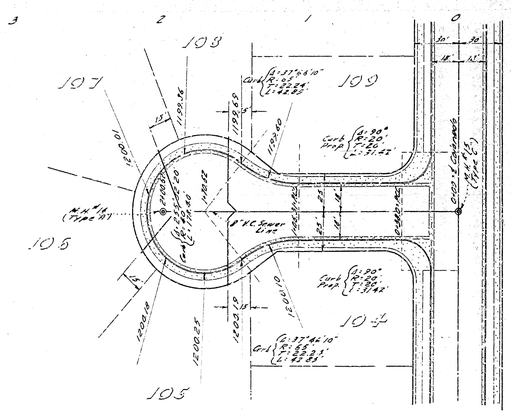

PLAN
COLORADO COURT
Scale 1"=40'

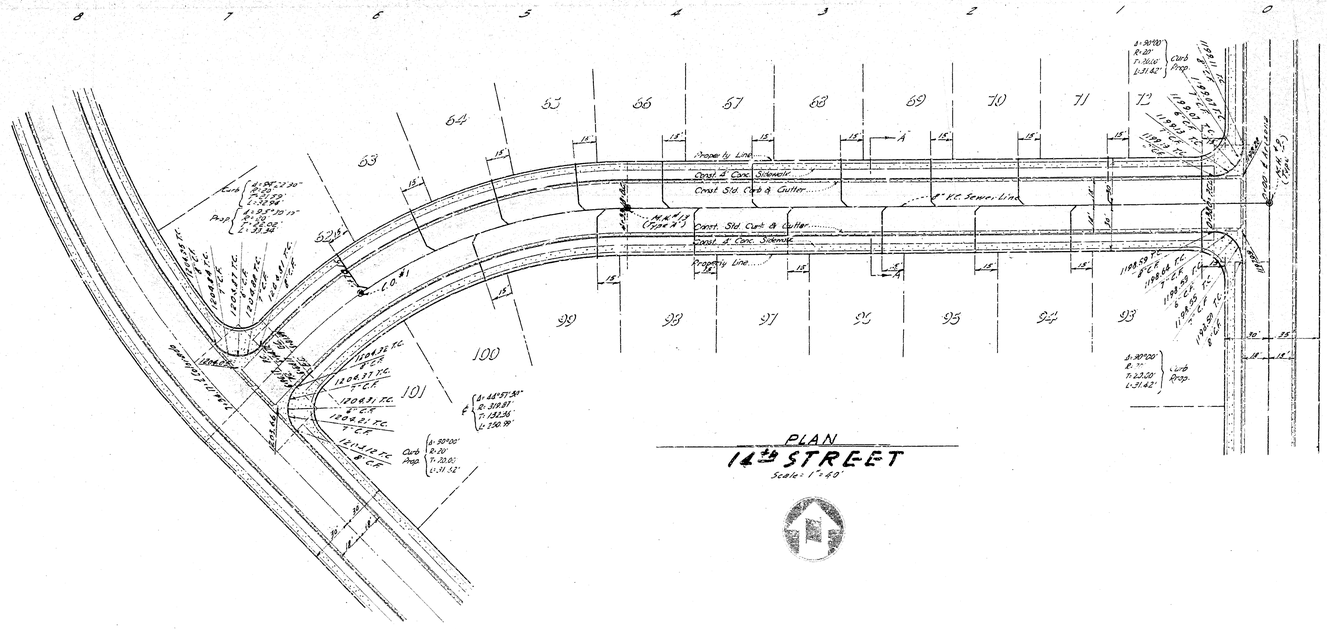

PLAN
14th STREET
Scale: 1"=40'

IMPROVEMENT PLANS
TRACT NO 5629 DWG NO 2540